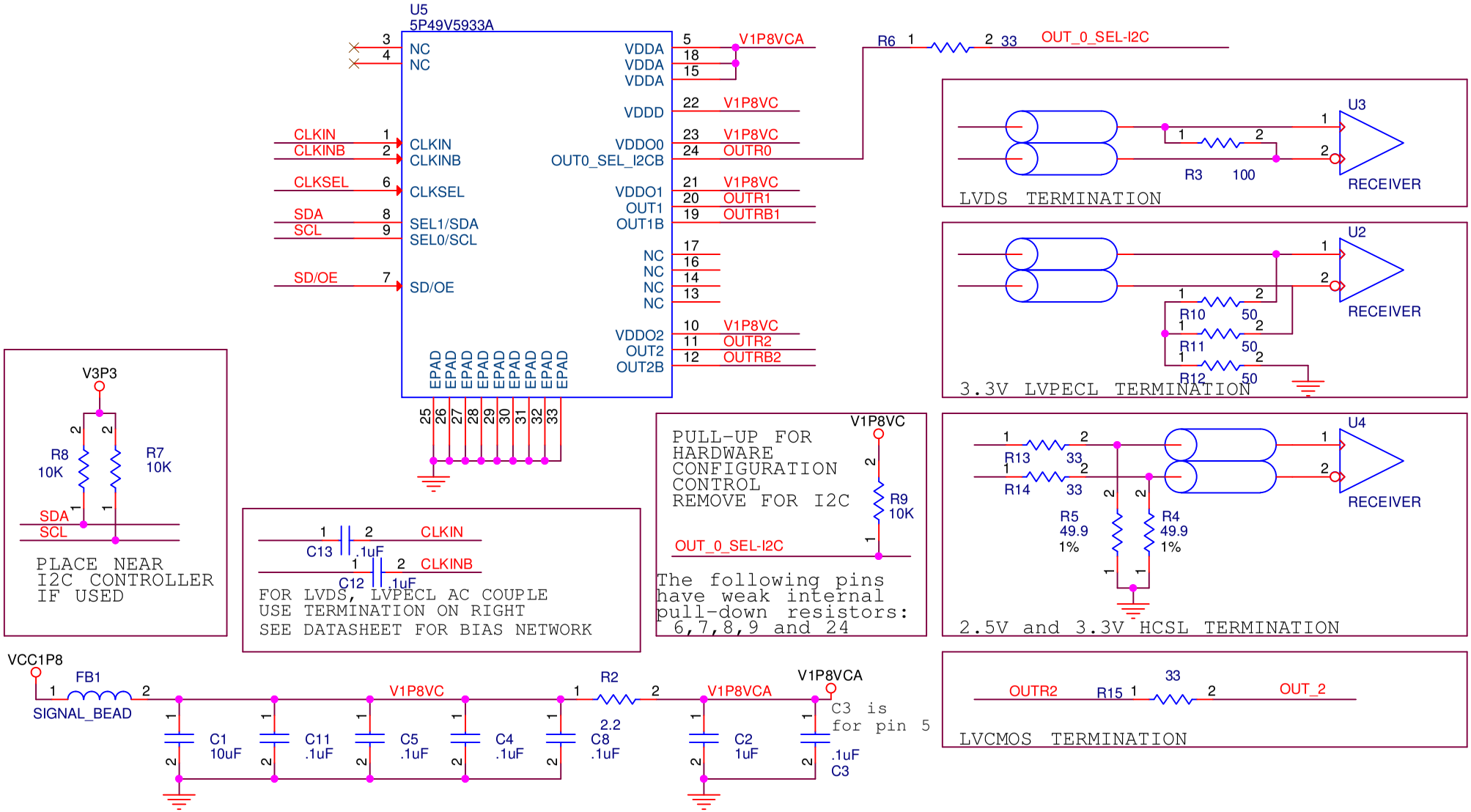

Layout notes:
1 Route power from bead through bulk capacitor pad then through 0.1uF capacitor pad then to clock chip Vdd pad.
2 Do not share ground vias. One ground pin one ground via.

NOTE:FERRITE BEAD FB1 =

Manufacture	Part Number	Z@100MHz	PkgSz	DC res.	Current(Ma)
Fair-Rite	2504021217Y0	120	0402	0.5	200
TDK	MMZ1005S241A	240	0402	0.18	200
muRata	BLM15AG221SN1	220	0402	0.35	300
muRata	BLM15BB121SN1	120	0402	0.35	300
TECSTAR	TB4532153121	120	0402	0.3	300

Revision history
0.1 03/26/2015 first publication
0.2 04/25/16 pin out correction

Integrated Device Technology
San Jose, CA

Size	Document Number	Rev
A	5P49V5933A_SCH	0.1

Date: Monday, April 25, 2016 Sheet 1 of 1